KHEOPE K13

01.03.2026_ rev.01

KE

KHEOPE K13/1

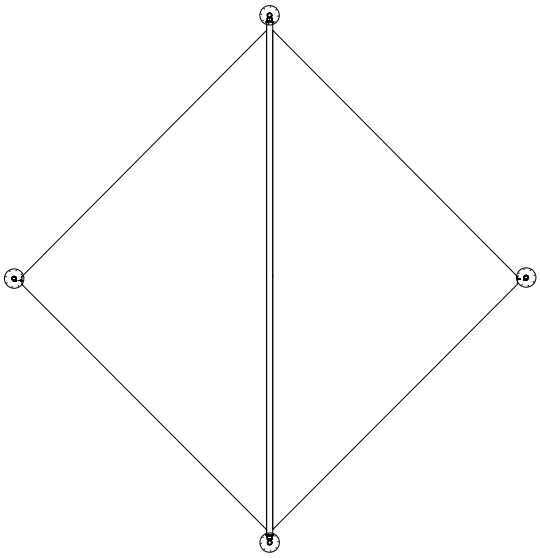

MAX CM

920x920

KHEOPE K13, a real large shade sail that expresses modernity and ensures an important shaded area, representing an innovative choice for the outdoor areas of tomorrow. The stainless steel of the structure and the materials of the sail ensure maximum functionality and sun protection, with a modern and essential design. Maximum achievable dimensions 9200x9200 mm. Wind resistant up to class 1 according to EN 13561. It is equipped with 129/90 mm steel poles and 160 mm aluminum boom. Maximum column height 4500 mm (special poles). Maximum coverage area per module 85sqm. Fixation can be to the wall or to the ceiling through a system of stainless steel brackets. Automatic handling through motor. Possibility of installing a lighting kit on poles or on the wall. Possibility of install brightness sensors and anemometers as well. Connection with remote controls and systems control via smartphone app. Boom profiles in extruded aluminum alloy 6060, brackets 304 stainless steel, stainless steel screws. Choice of fabrics between dacron or tempotest star resined according to KE samples.

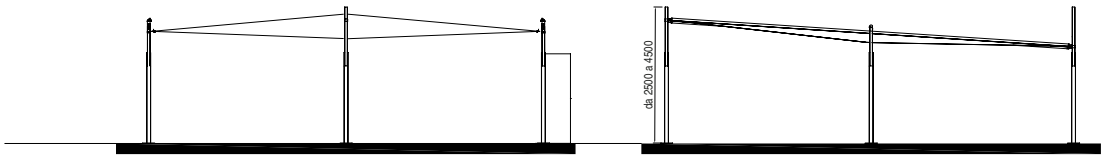

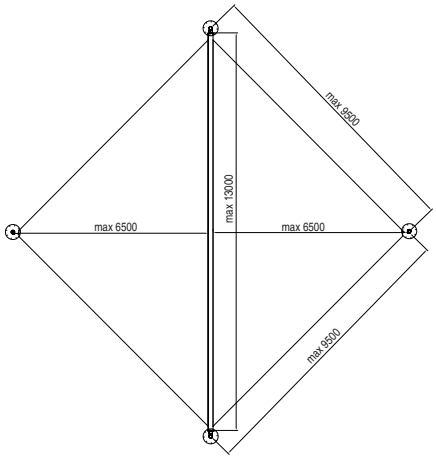

KHEOPE K13/2

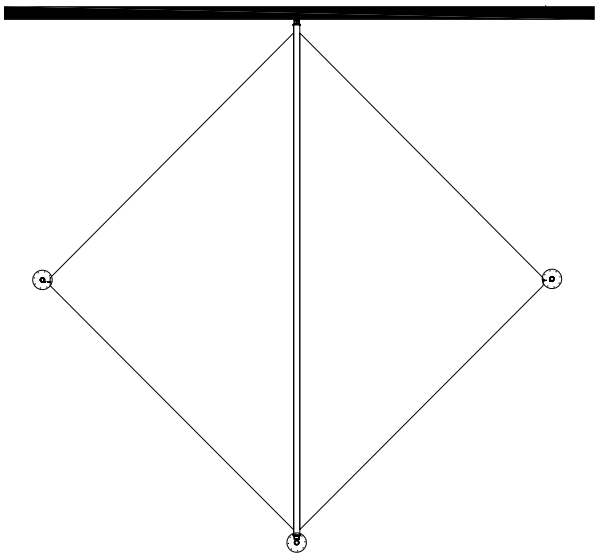

MAX CM

920x920

KHEOPE K13, a real large shade sail that expresses modernity and ensures an important shaded area, representing an innovative choice for the outdoor areas of tomorrow. The stainless steel of the structure and the materials of the sail ensure maximum functionality and sun protection, with a modern and essential design. Maximum achievable dimensions 9200x9200 mm. Wind resistant up to class 1 according to EN 13561. It is equipped with 129/90 mm steel poles and 160 mm aluminum boom. Maximum column height 4500 mm (special poles). Maximum coverage area per module 85sqm. Fixation can be to the wall or to the ceiling through a system of stainless steel brackets. Automatic handling through motor. Possibility of installing a lighting kit on poles or on the wall. Possibility of install brightness sensors and anemometers as well. Connection with remote controls and systems control via smartphone app. Boom profiles in extruded aluminum alloy 6060, brackets 304 stainless steel, stainless steel screws. Choice of fabrics between dacron or tempotest star resined according to KE samples.

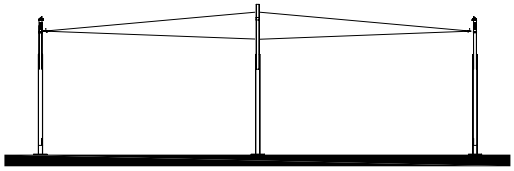

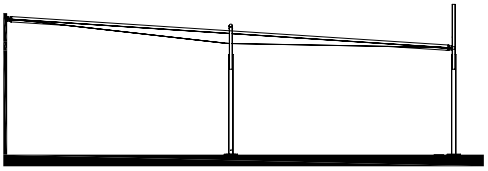

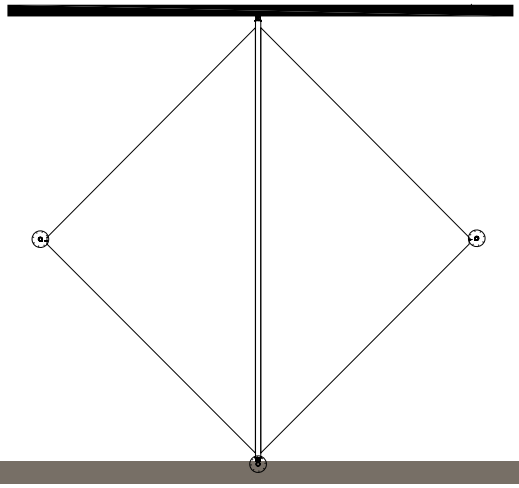

KHEOPE K13/3

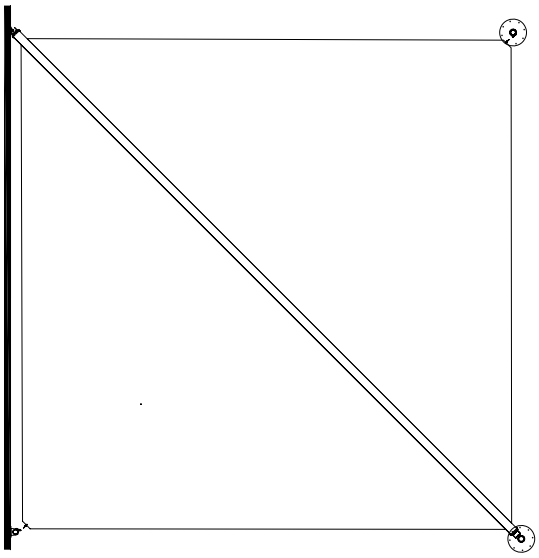

MAX CM

920x920

KHEOPE K13, a real large shade sail that expresses modernity and ensures an important shaded area, representing an innovative choice for the outdoor areas of tomorrow. The stainless steel of the structure and the materials of the sail ensure maximum functionality and sun protection, with a modern and essential design. Maximum achievable dimensions 9200x9200 mm. Wind resistant up to class 1 according to EN 13561. It is equipped with 129/90 mm steel poles and 160 mm aluminum boom. Maximum column height 4500 mm (special poles). Maximum coverage area per module 85sqm. Fixation can be to the wall or to the ceiling through a system of stainless steel brackets. Automatic handling through motor. Possibility of installing a lighting kit on poles or on the wall. Possibility of install brightness sensors and anemometers as well. Connection with remote controls and systems control via smartphone app. Boom profiles in extruded aluminum alloy 6060, brackets 304 stainless steel, stainless steel screws. Choice of fabrics between dacron or tempotest star resined according to KE samples.

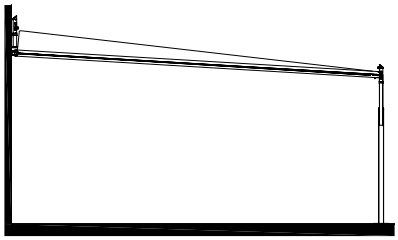

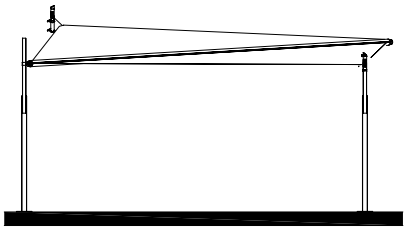

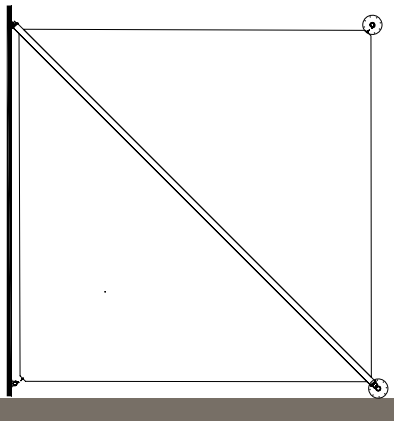

KHEOPE K13/4

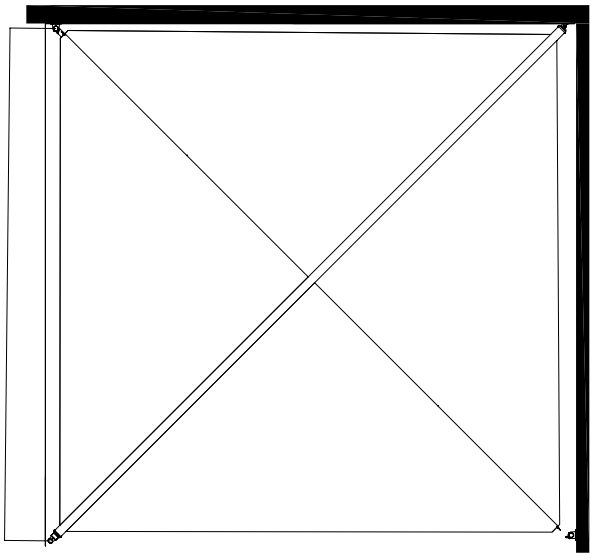

MAX CM

920x920

KHEOPE K13, a real large shade sail that expresses modernity and ensures an important shaded area, representing an innovative choice for the outdoor areas of tomorrow. The stainless steel of the structure and the materials of the sail ensure maximum functionality and sun protection, with a modern and essential design. Maximum achievable dimensions 9200x9200 mm. Wind resistant up to class 1 according to EN 13561. It is equipped with 129/90 mm steel poles and 160 mm aluminum boom. Maximum column height 4500 mm (special poles). Maximum coverage area per module 85sqm. Fixation can be to the wall or to the ceiling through a system of stainless steel brackets. Automatic handling through motor. Possibility of installing a lighting kit on poles or on the wall. Possibility of install brightness sensors and anemometers as well. Connection with remote controls and systems control via smartphone app. Boom profiles in extruded aluminum alloy 6060, brackets 304 stainless steel, stainless steel screws. Choice of fabrics between dacron or tempotest star resined according to KE samples.

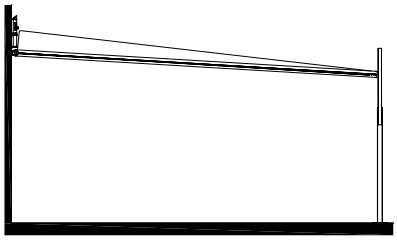

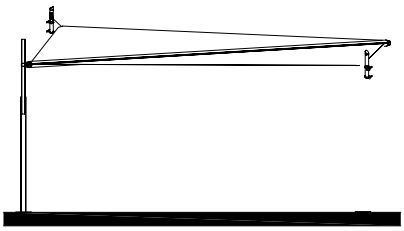

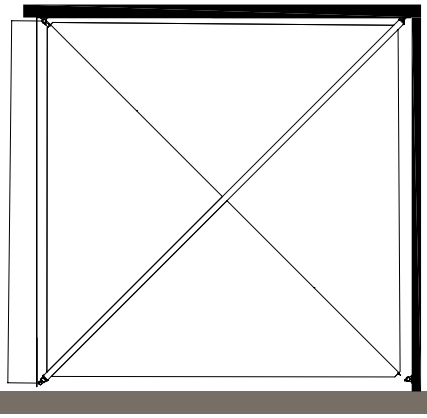

KHEOPE K13/5

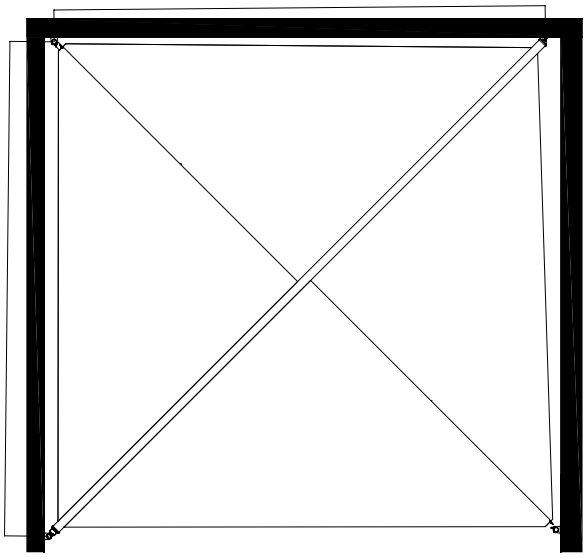

MAX CM

920x920

KHEOPE, a real shade sail of large dimensions that expresses modernity and ensures an important area of shade, representing an innovative choice for the covers of tomorrow. The stainless steel structure and the materials of the sail make the functionality absolute and the design light, modern, essential. Maximum dimensions 7000x7000 mm. Wind resistant up to class 1 according to EN 13561. It mounts steel poles of 90 mm and boom of 120 mm in anodized aluminum. Maximum column height 4500 mm (special poles). Maximum covering surface per module 50sqm. Fixing to the building can be wall or ceiling through a system of stainless steel brackets. Automatic movement through motor. Possibility of installing light kits on poles or wall. Possibility to install light sensors and anemometers as well as the connection with remote controls and control systems through app on smartphones. Boom profiles made of extruded aluminum alloy 6060, stainless steel 304 brackets, stainless steel screws, fabrics to choose between Dacron or tempotest star resin according to sample KE.

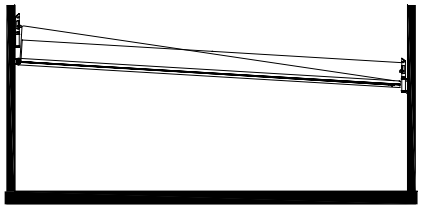

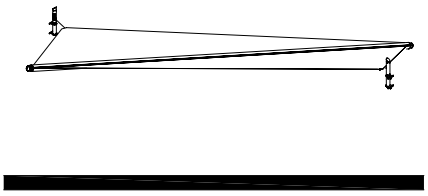

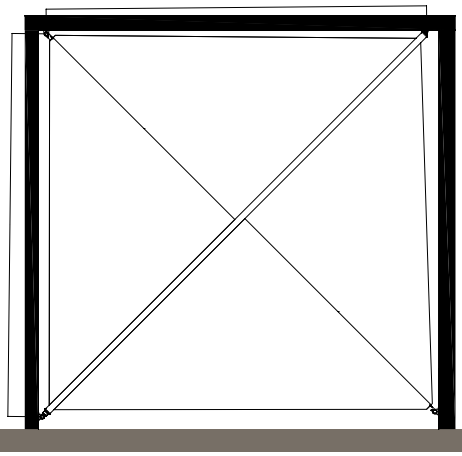

General technical plan

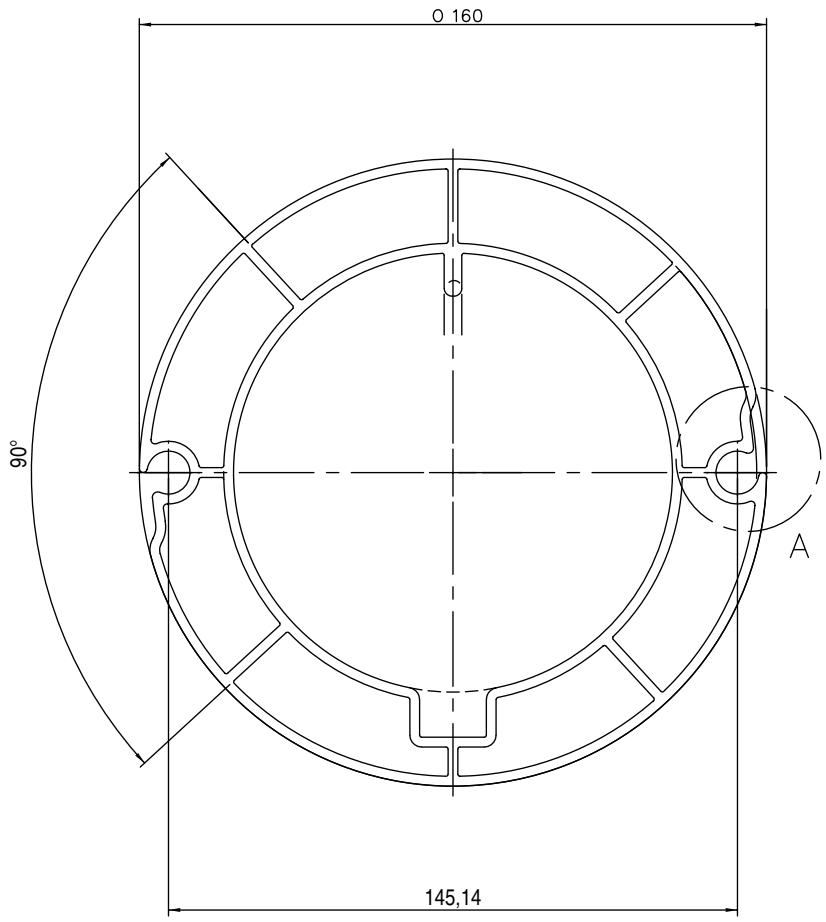

Boom

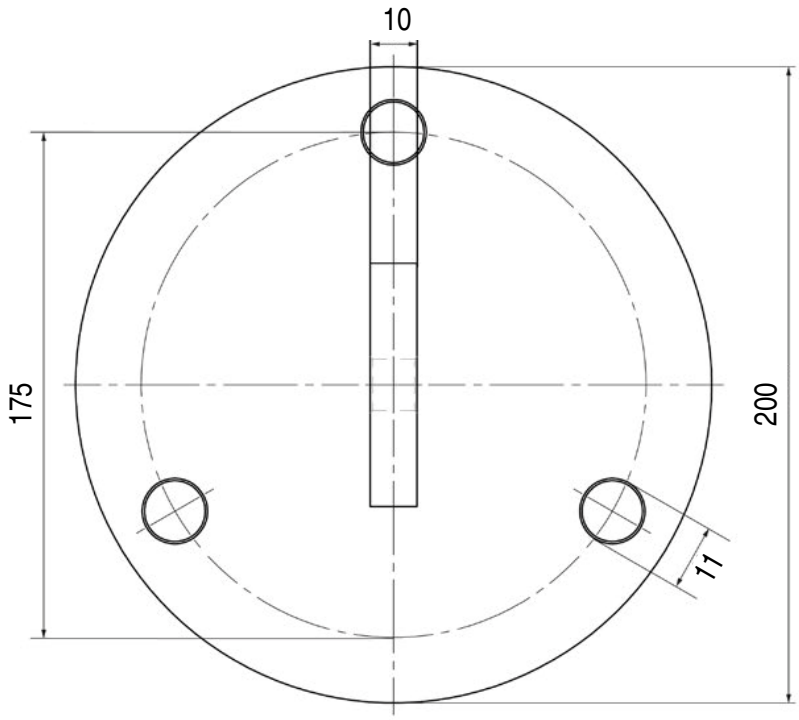

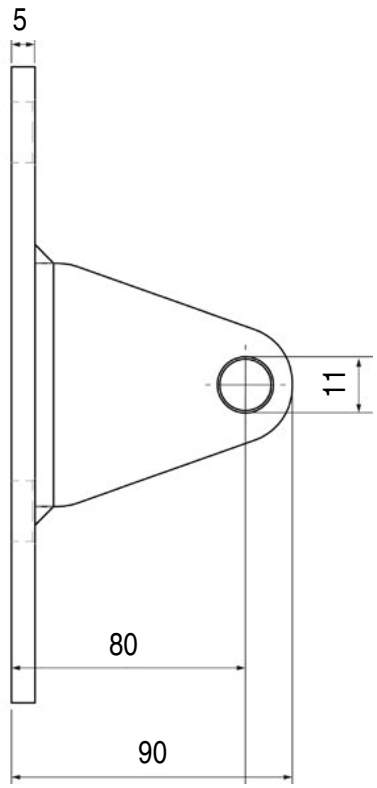

Wall bracket for boom

General technical plan

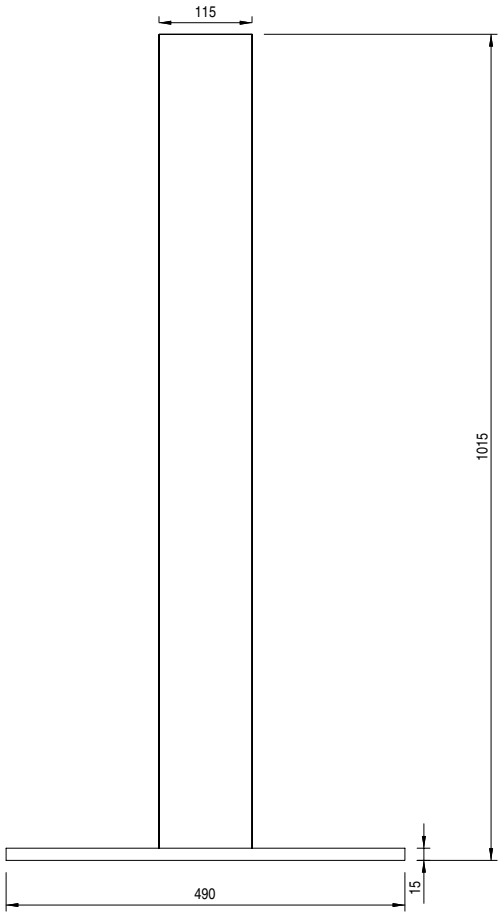

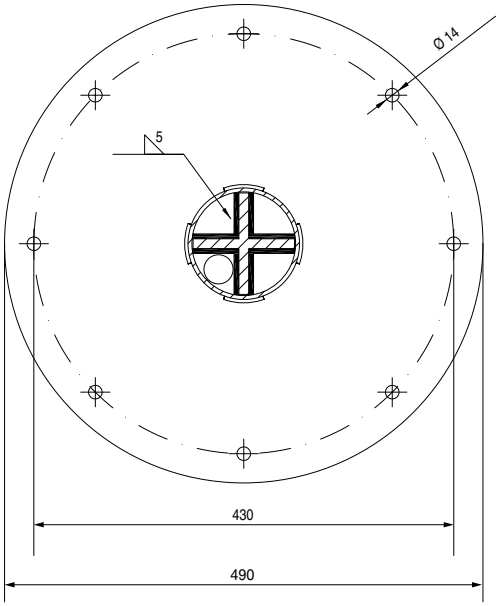

N.B. 90 mm poles need anti-wind elements

Fixing brackets

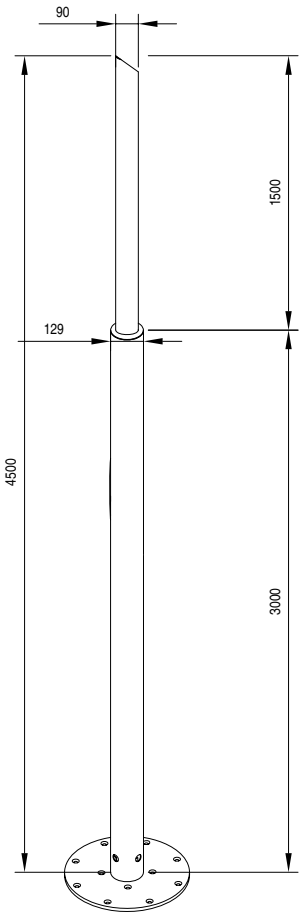

Pole

General technical plan

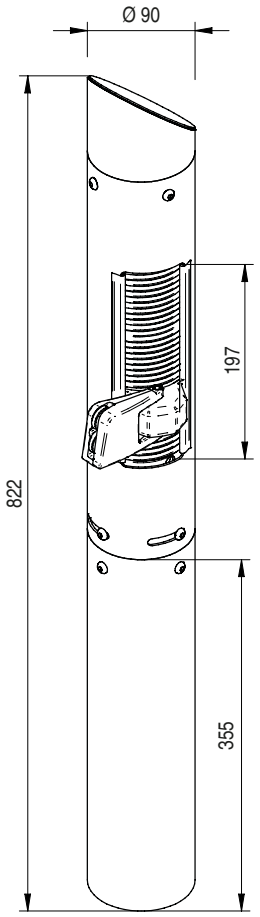

Pole motor

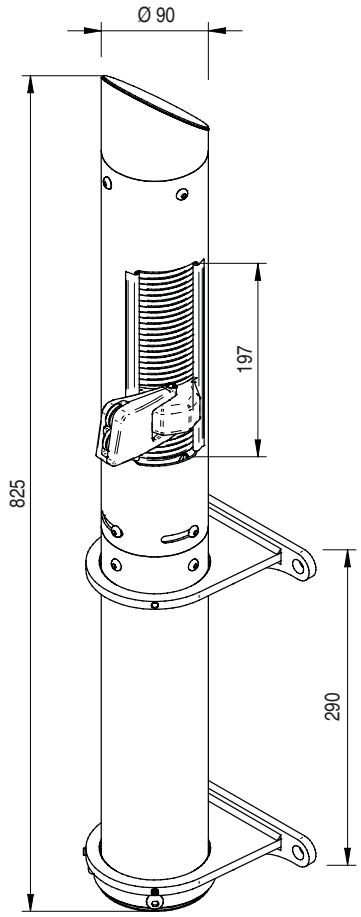

Wall motor

PICKLING Pickling is the process that uses chemical means on the surface of a ferrous metal to remove a layer of oxide and slag. Basically, the workpiece is immersed in these acids which clean it of all the impurities it has collected and make it passive. That is, no longer reacting (or in a very limited form).

MECHANICAL POLISHING
Mechanical polishing. It consists in removing material from the piece itself, through several grinding steps. So as to lower the level of surface roughness of the piece. Polishing of stainless steel surfaces requires the use of discs and synthetic abrasive pastes. The process makes the steel shiny and smooth. The product undergoes salt spray testing in accordance with ISO 9227 to confirm the conformity and consistency of the process. The European product standard EN 13561:2015 defines corrosion resistance classes for the metal parts that make up the product according to the table below. The tests carried out on the coating of the components and profiles allow us to classify the product in the maximum attainable class according to EN 13561:2015, C2/4. 48 h. internal components, 240 h. external components.

CORROSION RESISTANCE

Classes	1	2	3	4
Internal components	24	48		
External components		48	96	240

There is increasing demand for high-performance buildings that have a very low energy consumption and use energy derived from renewable sources. In particular, the limitation of solar heat gain is one of the most important aspects of summer thermal comfort. Solar shading plays an essential role in this concept. The gtot value determines the ability of the solar shield to maintain, in an environment directly exposed to solar radiation, a more comfortable temperature than that which would occur with the presence of glass alone. The solar heat gains are directly proportional to the total transmittance of solar energy gtot, a value that depends on the glazing and external shielding. The European product standard EN 13561: 2015 and the EN 14501 standard identify 5 energy performance classes as shown in the table below.

Effect of GTOT on thermal comfort					
Gtot value	>= 0,50	>= 0,35 e < 0,50	>= 0,15 e < 0,35	>= 0,10 e <0,15	< 0,10
Class	0	1	2	3	4
	very mild effect	Mild effect	Moderate effect	good effect	very good effect

Each KE product has a Gtot value according to the shading fabric / profiles used. For details, refer to the information provided with the technical data sheet of the fabric and the CE label.

FABRICS

Thermal comfort blends perfectly with beautiful style thanks to the more than 500 high performance fabrics available. A wide variety of colors, styles and solar shading factors allow for a system that meets your specific needs. All fabrics are CE Certified according to the EN 13561 and EN 14501 technical standards.

N.B.
See the Fabric Guide for further fabric specifications.

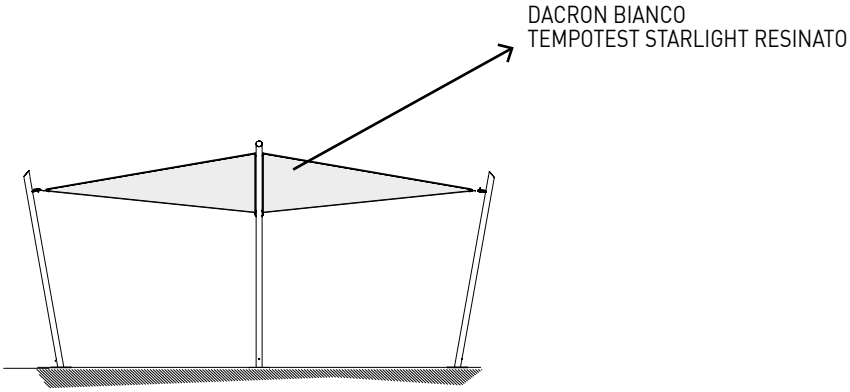

Standard

- DACRON BIANCO
  TEMPOTEST STARLIGHT RESINATO

KE

DICHIARAZIONE DI PRESTAZIONE N. 009/2020

Ai sensi dell'Allegato III del Regolamento (UE) n.305/2011 del 9 marzo 2011
modificato dal Regolamento Delegato (UE) n.574/2014 del 21 febbraio 2014

GENNIUS SAILS

Uso previsto del prodotto: **Tende per uso esterno**
Nome e indirizzo del fabbricante: **KE PROTEZIONI SOLARI S.r.l., Via Calnova 160/a, Noventa di Piave (VE) – Italia**
Sistema di valutazione e verifica della costanza di prestazione: **4**

Classificazione secondo Prospetto 1 - §4.1 EN 13561:2015:

Classi di resistenza al vento	0	1	2	3	4	5	6
Pressione di sicurezza del vento p_s (N/m²)	<48	48	84	132	204	324	480
Velocità massima del vento [km/h]	<25	25	35	45	55	70	90

Prestazione dichiarata:

Codice di identificazione del prodotto		Dimensioni massime [cm]		Classe di resistenza al vento	Specifica tecnica armonizzata
		A	B		
KHEOPE	K1, K2, K2A, K3, K3A, K4, K4A, K5	700	700	1	UNI EN 13561:2015
	K6, K7	500	1000	1	
KHEOPE SKIN	SK1, SK2, SK3, SK4, SK5, SK6	450	450	1	UNI EN 13561:2015
		500	400	1	
		550	350	1	
	SK7, SK8	350	600	1	
KHEOPE ROLLER	R01, R02, R03, R04, R05, R06	450	450	1	UNI EN 13561:2015
		500	400	1	
		550	350	1	
	R07, R08	350	600	1	
KOLIBRIE	ancorato a fondazione	320	320	2	UNI EN 13561:2015
		380	380	1	
	con base zavorrabile / fissato a parete	320	320	1	
		380	380	1	

Trasmittanza totale di energia solare g_{tot}: fare riferimento al valore riportato in etichetta CE in base al tipo di tessuto utilizzato. La fornitura dei prodotti sopra indicati è conforme all'insieme delle prestazioni dichiarate.
Si rilascia la presente dichiarazione di prestazione in conformità al regolamento (UE) n.305/2011 sotto la responsabilità esclusiva del fabbricante sopra indentificato.

CE EN 13561:2015

Noventa di Piave, 07 Luglio 2020

KE PROTEZIONI SOLARI S.r.l.
Simone Mazzon
Amministratore delegato

Photometric data	93100/36/3K
CCT	3000K
Total power	9W
Nominal lumens	650lm
Beam angle	36°
CRI	85

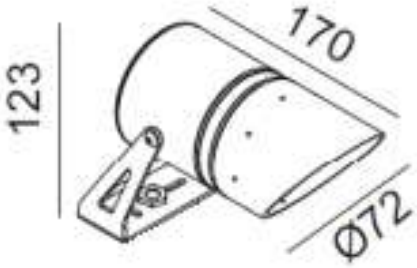

EN ISO 9001

KE has adopted a Quality Management System compliant with EN ISO 9001 requirements in order to maintain and increase quality and meet the highest customer expectations. This continuous improvement, through the control of all processes and careful evaluation of risks and opportunities, engages the entire organization in the development of systems to ensure the safety and reliability of the product and in the search for innovative solutions and technologies.

OHSAS 18001

KE has activated a Safety Management System as an integral part of its work organization, committing itself to organizing the entire structure in order to pursue the objectives of continuous improvement in terms of safety and health protection. Training, knowledge and compliance with current legislation on health and safety at work, cooperation and collaboration and preventive activities are actively pursued in order to minimize the prossibility of non-compliance.

EN ISO 14001

KE is ISO 14001 certified for environmental management and strives to be an example of respect for environmental resources and for the continuous improvement of its environmental management system. It is committed to continuous improvement and pollution prevention in compliance with applicable laws, regulations and standards; systematically detects any environmental impact of manufacturing processes, promotes the culture of recovery and recycling in the company and in the related production chain.

CE MARK _ EN 13561

The CE marking of outdoor awnings is a signal to the Consumer that the product can be sold freely in the EU single market, as it complies with Community provisions which recognize safety as the priority of every product that has this agreed upon reference standard. Verification of wind resistance capacity and the clear indication of the ability of the awning to contribute to the energy savings of the building (Gtot), are some of the commitments that the manufacturer makes to a product that has earned the CE marking. The name of the manufacturer, the reference standard (in our case EN 13561) accompany a product that is properly adapted to European indications.

CE MARK _ EN 1090-1

KE extended the CE marking in 2015 to stationary awnings, which are among the aluminum structural components covered by the international standard EN 1090-1. This marking reflects our use of rigorous structural design and manufacturing with qualified processes, adequate industrial resources and qualified personnel.

KE has adapted to the new ways of using the product by working on a digital showroom that is able to give the user a high-impact visual experience, a functional space where they can move around freely, receive detailed information on products with a simple click, and access content of interest quickly and intuitively. There is viewable content such as augmented reality and downloadable files such as data sheets, brochures and 3D models.

B2B - 3D CONFIGURATOR

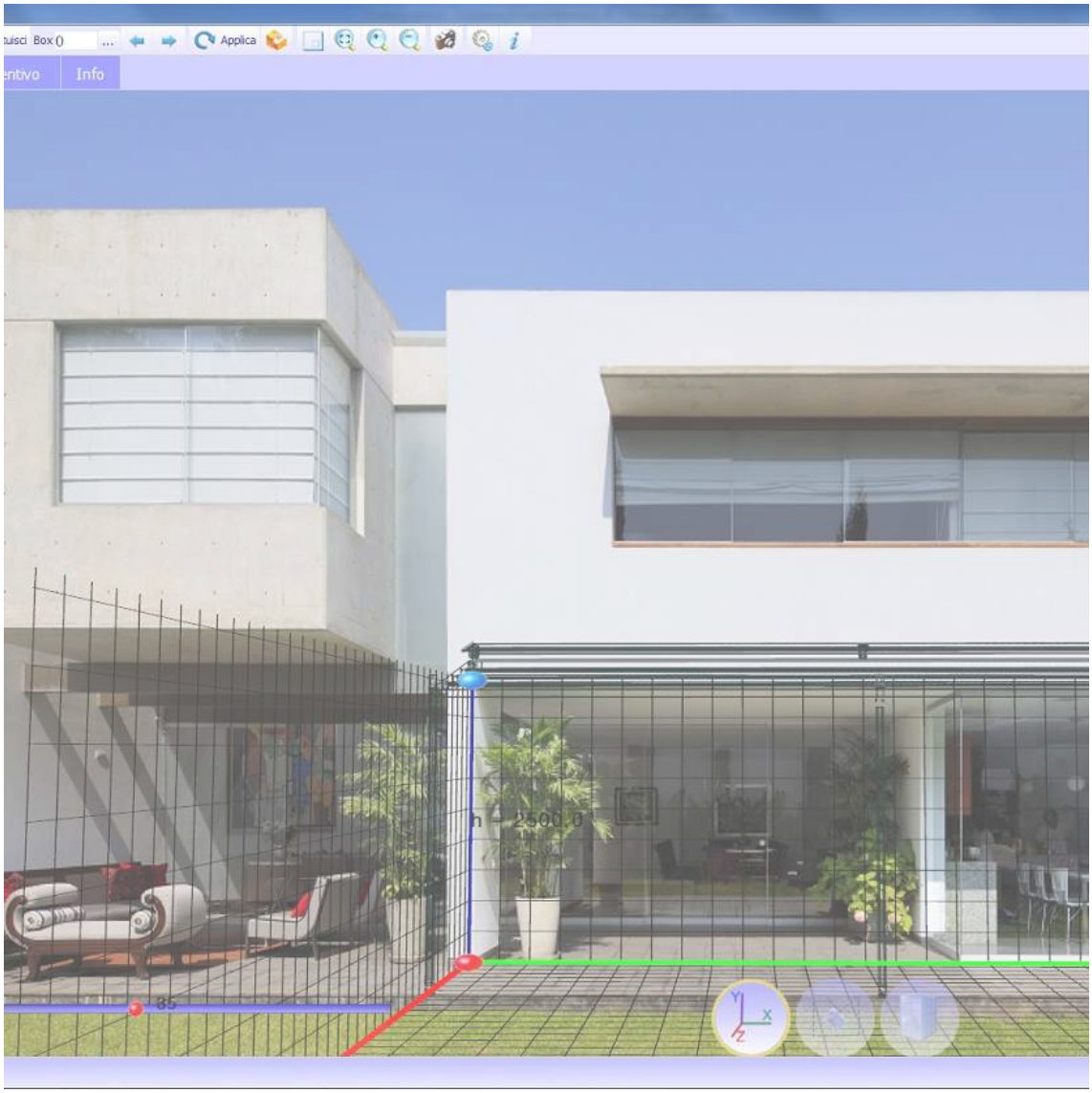

The KE B2B order system is a simple and intuitive service for placing orders conveniently online. An attractive graphic design, numerous functionalities and an easy and intuitive use mode that allows to access in real time to all the information related to the history of the orders and to the processing of the current ones. With the Cad Lite 3D Configurator you can configure Gennius and Bioclimatica models thanks to a constantly updated online catalogue. Thanks to an easy-to-use interface, it also allows you to formulate a complete quote with minimal error.

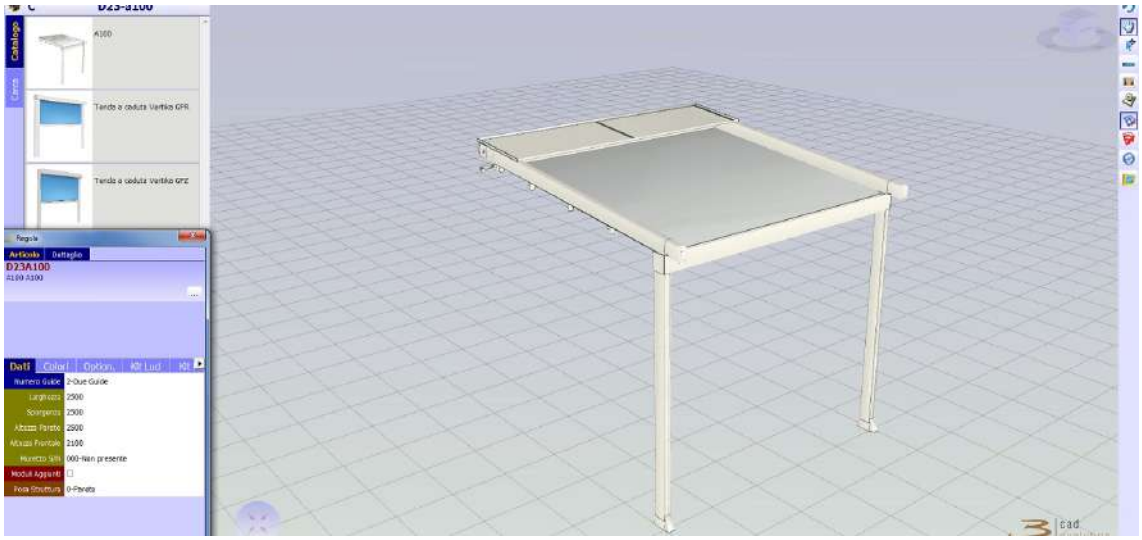

SITE - BIM

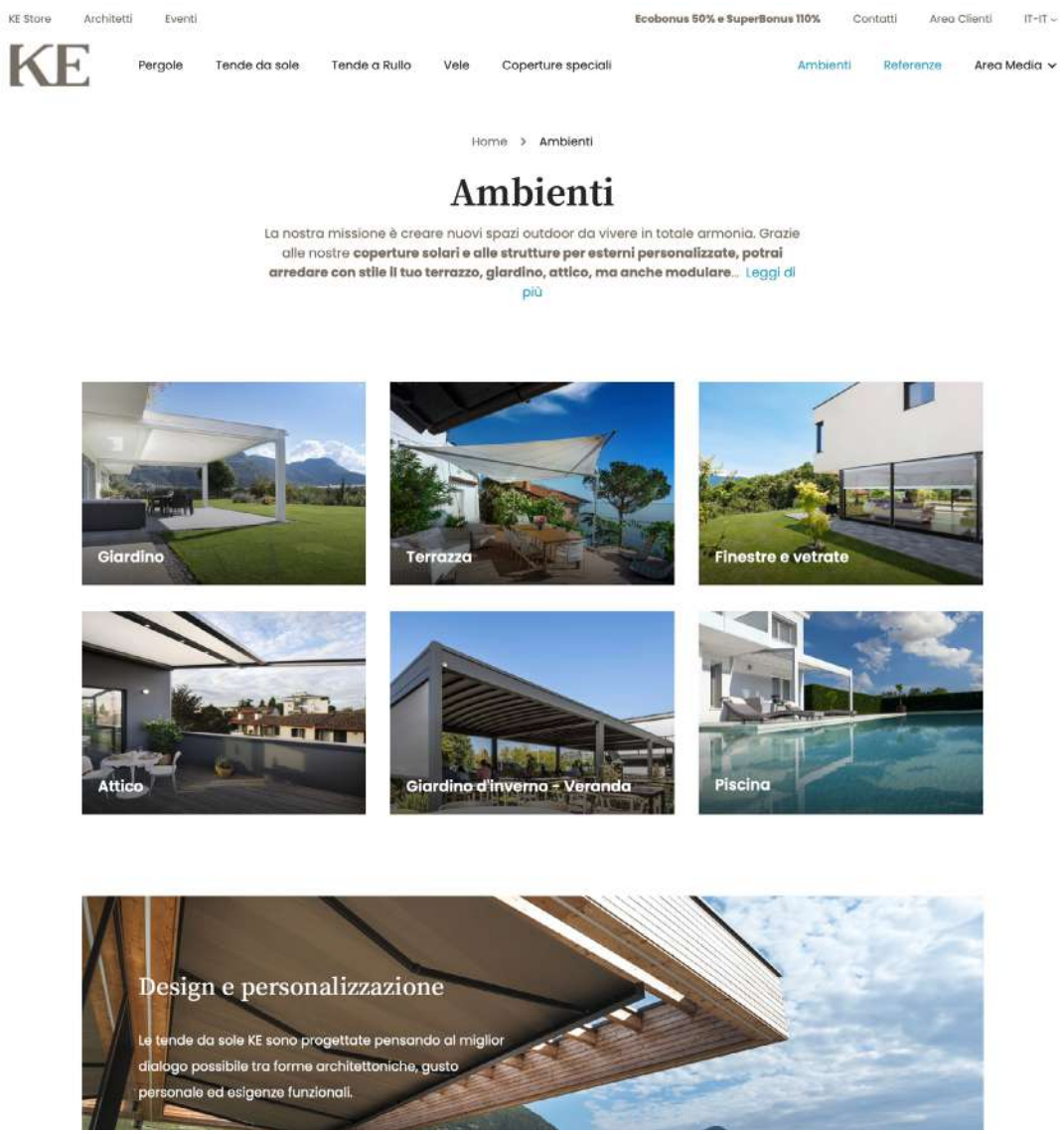

BIM technology improves the working method of designers and is now the main source of information for the realisation of a project. With BIM the model is generated in a "parametric 3D" from which a series of information such as 2D views, elevations, sections but also metric calculations and much more can be automatically derived. On the KE website you can find the BIM gallery of the main KE models, the certifications and all the useful technical documentation for each product: www.keoutdoordesign.com

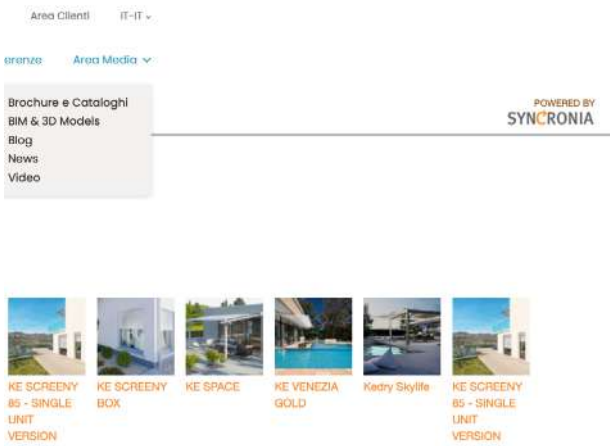

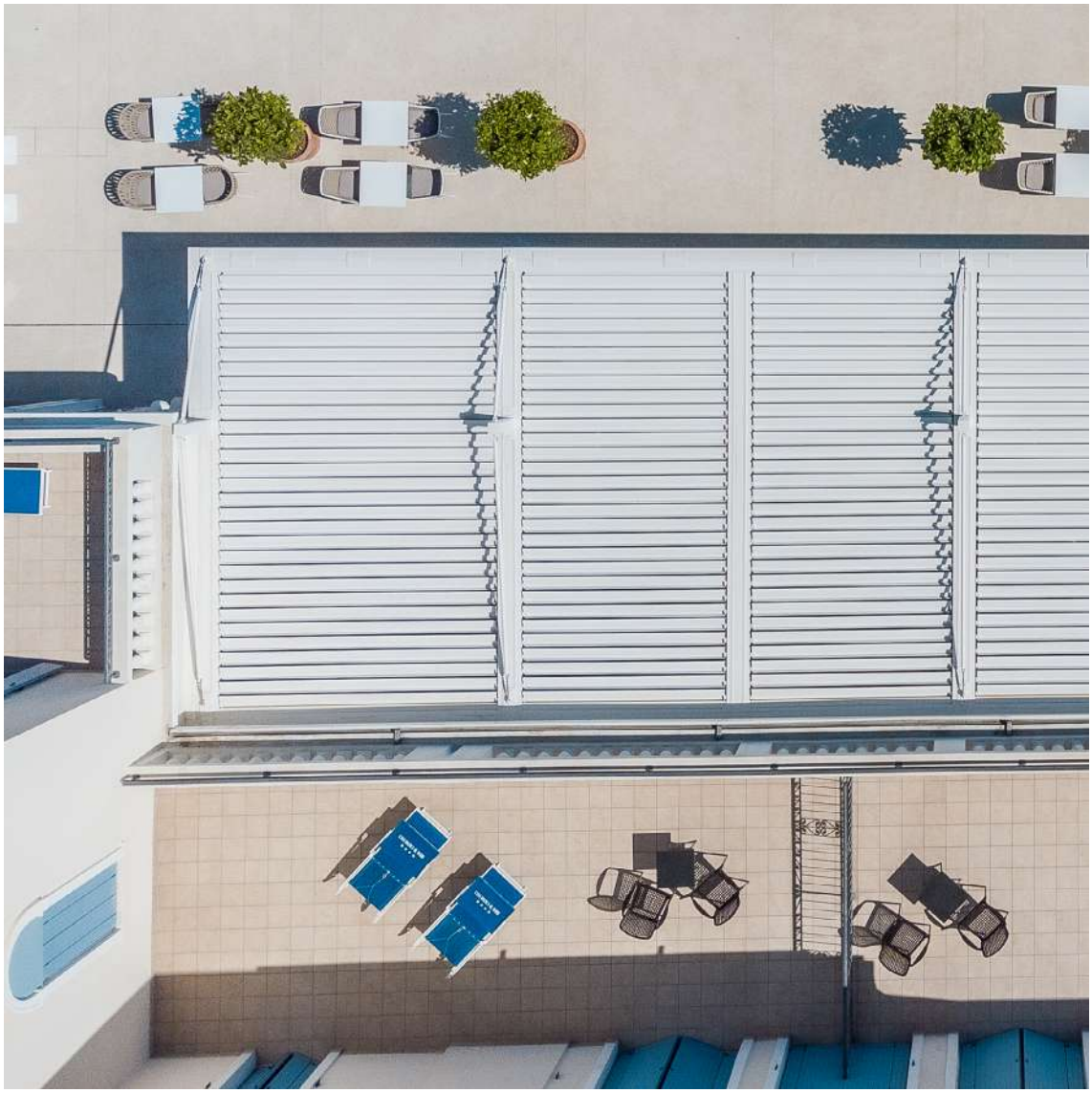

A GROUP,
A VISION,
A GROUP IN EVOLUTION

Since 1987, KE has been designing and manufacturing arm awnings, cassette awnings, drop awnings, canopies, shelters and is specialised in shading structures that enhance the liveability of outdoor spaces, up to the redesign and restyling of urban furniture. Both for the variety of the range and the depth of the configurations, KE is a manufacturing reality able to satisfy the most demanding requests the most demanding requirements of designers, architects, window and door manufacturers, upholsterers and outdoor professionals.

Improving the experience

With KE's professionalism and experience you can rely on quality products designed to enhance your customers' outdoor experience. With KE it will be easier to live the outdoor space in perfect harmony with the surrounding environment, widening the viewpoints and ensuring maximum comfort in all seasons.