SPACE/SPACE WALL

Space Wall is an elegant and modern tension rollup shade system designed to mount with bracket attachment to wall, soffit, or roof applications to shade open areas with supporting leg posts.

Space is an elegant and modern tension rollup shade system designed to mount with bracket attachment onto pre-existing substructures such as verandas and pergolas.

SPACE/SPACE WALL

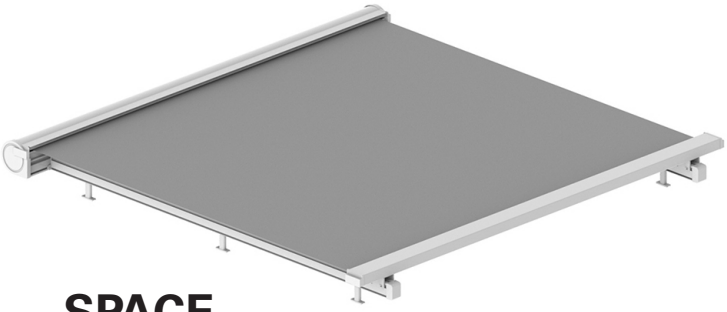

SPACE

SPACE WALL
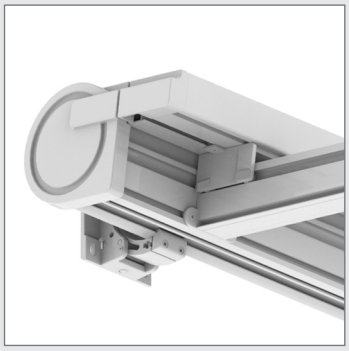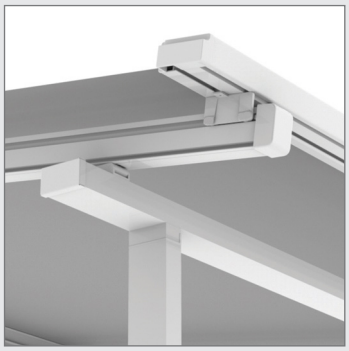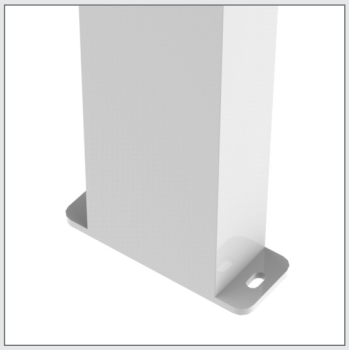
SPECIFICATION CHART	TENSION SHADE SYSTEMS SPACE	TENSION SHADE SYSTEMS SPACE WALL
Width (1/4" increments)	5′ - 23′	5′ - 23′
Projection	5′ - 23′	5′ - 18′
Arm type (belt or cable)	Gas pistons guide rails	Gas pistons guide rails
Cassette options	Full	Full
Hood	N/A	N/A
Drop valance option	N/A	N/A
Fabric selections	Acrylic fabrics	Acrylic fabrics
Complete fabric protection	Yes	Yes
Motorized or manual	Motor only	Motor only
Roller tube size	80	80
Frame colors	White, Charcoal	White, Charcoal
Custom colors	N/A	N/A
Framework warranty	*Limited Lifetime Warranty *(gas pistons 2 year warranty)	*Limited Lifetime Warranty *(gas pistons 2 year warranty)
Roof mount	N/A	Yes used with headerboard
Soffit mount	N/A	Yes
Wall mount	N/A	Yes
On top of any existing structure or Pergolas	Yes	N/A